Running a restaurant means thinking about security in layers, not as a single device on the wall. The obvious concerns are break-ins, after-hours entry, cash handling, and employee safety. Then there is the side many owners discover only when a permit issue, inspection question, or alarm problem lands on their desk: compliance. In Connecticut, restaurant security is not just about choosing cameras or deciding who gets a key. It also touches alarm registration, fire code obligations, and who is legally allowed to install or service certain systems.

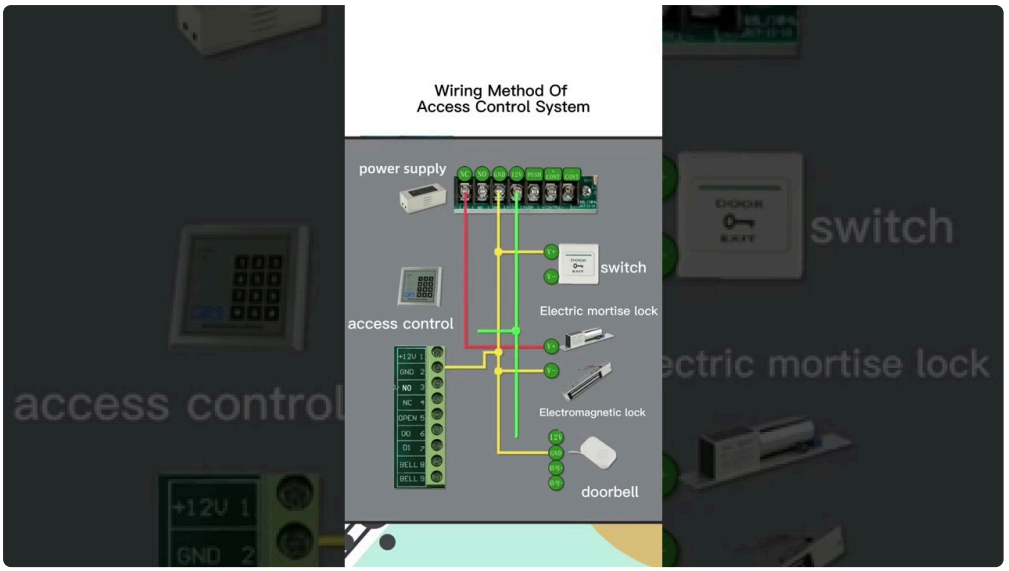

That matters more than many operators expect. Restaurants are busy, equipment-heavy spaces with late hours, frequent vendor traffic, and a lot of turnover at the front and back of house. Security choices often get made in a hurry, usually after a scare, a false alarm, a lock problem, or a change in management. I have seen owners spend plenty on hardware and still miss the administrative piece that keeps the whole setup legal and workable.

If you own or manage a restaurant in Connecticut, especially in a city like Norwalk, it helps to separate the conversation into three practical buckets. First, what the system does. Second, who can work on it. Third, what the local and state rules expect from you once it is in place.

Security in a restaurant is rarely one thing

A restaurant security setup often combines burglar alarms, holdup or panic features, cameras, door hardware, and access control systems. Some locations also tie security work into the building’s existing electrical infrastructure or low-voltage wiring. The technology can feel seamless from the user side, but the legal treatment of that work is not always simple.

Connecticut draws a clear line around what counts as “alarm systems” work. The state classifies alarm systems work as the installation, renovation, repair, and maintenance of low-voltage fire protection, security, and other alarm systems. That is broad enough to cover much of what restaurant operators think of as day-to-day electronic security work.

There is also a separate point that catches people off guard. Connecticut law specifically treats electronic locks and access control devices as work that may be serviced, installed, or repaired by people who hold the required electrical contractor or journeyperson license. In plain terms, if your project involves electronic locking hardware or related access control systems, the person doing the work cannot just be “good with doors” or “our camera guy.” Licensing matters.

That distinction becomes important when a restaurant wants to tighten key control, set staff access by schedule, or limit entry to offices, liquor storage, or rear service doors. From an operational standpoint, electronic access is often one of the smartest upgrades a restaurant can make. From a compliance standpoint, it is also the kind of work where owners should slow down and ask exactly who is doing what.

The practical reality of alarm work in Connecticut

Restaurants typically call for security service under pressure. A keypad malfunctions. A former employee still has credentials. A back door needs an electronic strike. A false alarm keeps happening at close. The temptation is to call whoever can get there first.

The safer approach is to understand the buckets of work involved.

When the job is installation, repair, renovation, or maintenance of low-voltage security or alarm systems, Connecticut treats that as alarm systems work. When the job extends to electronic locks and access control devices, Connecticut specifically points to the required electrical contractor or journeyperson license. And where the project includes wiring, circuits, panel boards, fixtures, or related equipment, Connecticut also recognizes electrical work as its own classification.

That may sound technical, but it has everyday consequences. A restaurant owner might think they are buying “one security package,” while the actual work spans multiple regulated categories. A clean proposal should make those categories visible, not bury them in vague language.

I usually tell operators to ask a very basic question before any work starts: is this an alarm job, an electrical job, an access control job, or some combination of the three? If the answer is fuzzy, that is often the first warning sign.

Norwalk adds a local rule owners should not miss

Norwalk has a very specific alarm requirement, and it applies to more than just the hardware itself. The city requires all burglar and holdup alarm systems, along with the users and alarm contractors tied to them, to be registered with the Norwalk Police Department’s Alarm Administrator.

For a restaurant, that means the compliance obligation is not limited to the installer. The user side matters too. If your restaurant uses a burglar alarm or holdup alarm in Norwalk, registration is part of the picture. If a new contractor takes over service, that relationship matters as well. Owners sometimes assume registration is a one-time paperwork issue handled by someone else. That is not a safe assumption.

This is one of those local rules that can get overlooked when a restaurant opens fast or changes hands. I have seen businesses inherit systems from prior tenants and assume everything is already in order. Sometimes it is. Sometimes the equipment remains on site, but the registration details do not match the current operator, the current alarm contractor, or the actual use of the premises.

The fix is usually straightforward, but only if someone catches it early.



Fire code obligations matter even when you are focused on security

Restaurant owners often separate “security” from “life safety” in their minds. On paper, they may be separate scopes. In the real building, they live side by side.

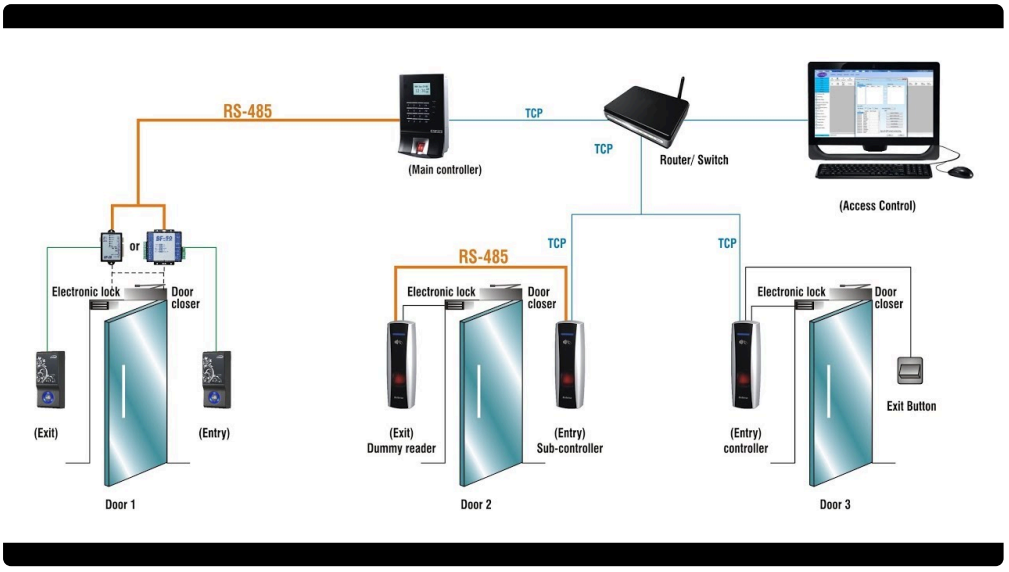

Connecticut’s state fire code says fire alarm, sprinkler, and standpipe systems generally must be maintained in operable condition at all times. That has obvious implications for restaurants occupying larger commercial spaces, mixed-use buildings, or sites with existing fire protection systems. It also affects any security project that might interfere with wiring, access, wall penetrations, or the operation of life safety features.

A restaurant manager may only be thinking about stopping unauthorized entry through a rear door. But if the chosen work affects a fire-rated opening, an alarm interface, or another building system, the project can drift into a very different compliance conversation. That is one reason seasoned contractors ask more questions than owners expect. They are not necessarily being difficult. They may be trying to avoid creating a problem that shows up later during an inspection or service call.

In Norwalk, buildings other than single-family and two-family homes must be inspected for fire code compliance under Connecticut fire safety and fire prevention codes. Restaurants fall squarely into the kind of occupancy where fire code attention is part of doing business, not an optional extra.

That does not mean every restaurant security upgrade becomes a major permit event. It does mean owners should stop treating security work as isolated from the rest of the building.

What “compliance basics” really looks like for a restaurant

Compliance often sounds abstract until you attach it to ordinary operations. For a restaurant, the basics are less glamorous than cameras and less visible than keypads, but they are the part that prevents headaches.

A sensible starting checklist looks like this:

1. Confirm whether your burglar or holdup alarm in Norwalk is properly registered with the city’s Alarm Administrator.
2. Verify who is performing the work and whether the scope involves alarm systems work, electrical work, or electronic locks and access control devices.
3. Keep fire protection systems operable at all times and do not let security work interfere with them.
4. Review inherited equipment carefully if you took over a second-generation restaurant space.
5. Secure any vacant or temporarily unused space to prevent unauthorized entry.

That fifth point deserves more attention than it usually gets. Connecticut’s fire code says vacant buildings must be secured to prevent unauthorized entry, and combustible materials must be removed from vacant spaces. For restaurants, that can come into play during a remodel, a delayed opening, an ownership transition, or a seasonal pause in operations. A vacant or partially vacant restaurant is not just a leasing problem. It can become a code and risk management issue very quickly.

I have seen operators leave a space “mostly empty” while waiting on financing, equipment delivery, or final business decisions. During that time, they may not think of themselves as active occupants, but the building still exists as a physical risk. Doors need to be secured. Materials need to be managed. Systems should not be ignored simply because service has not started yet.

Access control is useful, but the details matter

The phrase access control systems can mean a lot of things in practice. In restaurants, it often comes down to controlling staff entry, reducing key duplication, limiting office access, and managing rear or side doors that are easy to misuse. It can also help with employee turnover. If a supervisor leaves, you can disable credentials without replacing mechanical locks throughout the building.

That is the upside.

The trade-off is that electronic locks and access control devices fall into a category Connecticut treats seriously. If the work is not handled by properly licensed people, the convenience of the upgrade can come with real exposure. This is one of those areas where restaurant owners sometimes over-focus on features and under-focus on installation authority.

A small example illustrates the point. Say a restaurant wants to add electronic locking to a stockroom and a rear kitchen entrance. From the owner’s point of view, it feels like one project. From a compliance point of view, it may involve low-voltage security work, electronic locking devices, and electrical considerations depending on the exact setup. If the contractor cannot explain how those pieces are being handled, the owner should press for clarity before signing off.

The same is true when camera vendors branch into door hardware or when locksmith-type services branch into electronic credentials. The line between convenience and noncompliant work can get blurry fast.

Residential rules still matter in mixed-use situations

Most restaurant owners think in commercial terms, and rightly so. Still, Connecticut has a rule worth noting for operators who own mixed-use property or who live above a small business location.

The state's home improvement rules say that alarm systems which do not require electrical work fall under home improvement contractor registration when performed on residential property. That is not a restaurant rule, strictly speaking, but it matters in the real world because many Connecticut properties mix commercial and residential uses. A family-owned restaurant may occupy the ground floor while the owner or tenants occupy residential space above or behind it.

If work is being done on the residential side, the compliance path may differ from work being done in the restaurant. Owners who assume one contract can cover both without any distinction may create confusion *access control systems Mammoth Security* for themselves later. The building may be one address, but the legal treatment of the work can vary by use and scope.

Norwalk's reminder that owners of three-family-or-more homes and apartment buildings are responsible for installing and maintaining smoke and carbon monoxide detectors as required by state fire codes speaks to the same broader theme. Once a property crosses into multi-unit residential territory, the owner's obligations expand in ways that are easy to underestimate.

For a restaurant operator with apartments above, that can feel like two different worlds sharing one roof. From a compliance standpoint, that is often exactly what it is.

Municipal projects tell you something about local expectations

One useful clue about how cities view security infrastructure is what they buy for their own buildings. Norwalk's own bidding records show that the city has procured security camera and access/CCTV work for municipal properties. That does not create a special rule for private restaurants, but it does reinforce a practical point: cameras, access, and related security systems are treated as real facility infrastructure, not as casual add-ons.

That is a healthy mindset for restaurant owners to adopt. If the city treats these systems as infrastructure, private operators should too. Security work affects building operation, accountability, and, in some cases, code compliance. It deserves the same level of planning a restaurant would give to refrigeration, hood work, or a POS rollout.

Too often, owners purchase security the way they buy consumer electronics. They compare app screens, monthly fees, and camera counts, then move on. Commercial occupancy is less forgiving. The system may intersect with electrical licensing rules, local registration, and life safety obligations. Treating *pub-a1f1395ef95b4c0e9e14004ca6d389f1.r2.dev access control systems* it like infrastructure helps owners ask better questions at the front end.

Common situations where restaurants get tripped up

Some mistakes are more common than others, and they usually start with assumptions.

One common issue is assuming the prior tenant's setup is still valid. A keypad on the wall does not tell you whether a burglar or holdup alarm is properly registered in Norwalk under the current user and current

contractor. Another is assuming one vendor can legally handle every device involved in a project. They may be able to, but owners should verify rather than guess.

A third issue is making security changes during a remodel without considering the building's fire protection systems. Connecticut's rule that fire alarm, sprinkler, and standpipe systems generally must remain operable at all times is not a background detail. It is a live obligation. If a remodel disrupts those systems or creates a conflict, owners need to know before the walls are opened.

Then there is the in-between state, which is where many restaurants spend more time than expected. A lease is signed, but opening is delayed. A concept closes temporarily. A buyer is lined up, but not yet ready to operate. Those periods can create a false sense that nothing needs attention because "we are not open." Vacant or underused space is exactly when securing the premises becomes critical, and Connecticut's fire code directly addresses that.

Questions worth asking before work begins

A short conversation at the proposal stage can prevent weeks of trouble later. I would ask these questions before authorizing any restaurant security work in access control systems Connecticut:

1. Does this project involve alarm systems work, electrical work, or both?
2. Will any electronic locks or access control devices be installed, serviced, or repaired?
3. If the restaurant is in Norwalk, who is responsible for alarm registration and is the current registration status confirmed?
4. Could any part of the work affect fire alarm, sprinkler, or standpipe systems that must remain operable?
5. Is any part of the property residential, mixed-use, vacant, or temporarily unoccupied in a way that changes the compliance picture?

Notice that none of those questions asks what brand of hardware is being installed. Features **access control systems** matter, but legality and operability matter first. A sleek dashboard does not help much if the project scope was mishandled from day one.

Good security planning is mostly about coordination

The best restaurant security projects are rarely the flashiest. They are the ones where the owner, contractor, and building stakeholders all understand the same scope. If there is an alarm component, it is identified as such. If there are electronic locks or access control systems, licensed personnel handle that work appropriately. If the restaurant is in Norwalk, registration is not treated as an afterthought. If the building has fire protection systems, nobody works around them casually.

That kind of coordination is especially important in older Connecticut buildings, shared plazas, and mixed-use properties. The more history a space has, the more likely it contains inherited devices, undocumented changes, or assumptions that no longer hold up. Restaurants also tend to evolve quickly. A storage room becomes an office. A side door becomes a delivery point. A former dining area is closed off for renovations. Security setups need to keep pace with those changes, but compliance needs to keep pace too.

What I like to see is a restaurant owner who treats security as part of operations rather than a side purchase. That means asking who is authorized to do the work, whether local registration applies, and how the project fits with the building's fire and occupancy obligations. It is not glamorous, but it is the sort of discipline that prevents expensive fixes later.

For Connecticut restaurants, especially in places like Norwalk, the basics are not hard to understand once they are laid out plainly. Burglar and holdup alarms in Norwalk must be registered. Alarm systems work has a defined meaning under state classifications. Electronic locks and access control devices are tied to required electrical licensing. Fire protection systems generally must stay operable. Vacant spaces must be secured. And mixed-use properties can trigger additional considerations that do not show up in a simple equipment quote.

That is the real backbone of restaurant security compliance. The devices matter. The paperwork, licensing, and building obligations matter just as much. When those pieces line up, security stops being a patchwork response and starts functioning the way it should, as a reliable part of how the restaurant runs.